Acme Sanitary Ware Co. Ltd.
Since 1949
1/F, Acme Building, 22-28 Nanking Street, Kowloon, Hong Kong
Tel: 2388 7171 Fax: 2710 8012
Email: acme@acmesanitary.com.hk
Website: www.acmesanitary.com.hk

GROHE Pure Freude an Wasser

PROJECT		REF		REV	ITEM CODE	
LOCATION		DATE			PAGE	

SANITARY WARE SPECIFICATION SHEET

Item Descriptions	GROHE (Thailand) "Eurostyle" Single-lever basin mixer 1/2" S-Size; nominated flow rate **4.9 L/min** in WELS **Grade 1**; Registration No. TM 22-0118
Dimensions	L110 x W50 x H210 mm
Model	33558003
Finish	Chrome Plated
Country of origin	Thailand
Manufacturer	GROHE Limited
Supplier	Acme Sanitary Ware Co. Ltd Mr. Eric Wong/ Mr. Don Yuen
Contact Tel/Fax	(852) 2388-7171 / (852) 2710-8012
E-mail	acme@acmesanitary.com.hk
Website	www.acmesanitary.com.hk

Illustration/ Drawing

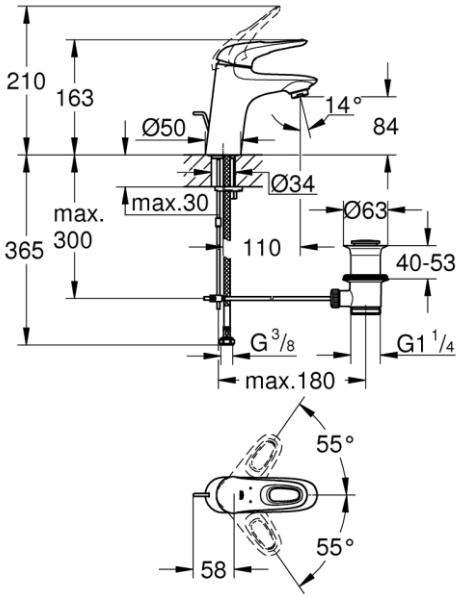

"Eurostyle"
Basin mixer 1/2 〃 S-Size

- monobloc installation
- loop metal lever
- **GROHE SilkMove** 35 mm ceramic cartridge
- adjustable flow rate limiter
- with temperature limiter
- **GROHE StarLight** chrome finish
- **GROHE EcoJoy** mousseur 5.7 l/min
- **GROHE FastFixation** rapid installation system
- pop-up waste set 1 1/4"
- flexible connection hoses

33558003

33558LS3

Colour options:
003 Chrome
LS3 MoonWhite

** All information of the above is for the reference only. No prior notice is made if any changes.*

註冊號碼 (Registration No.) : TM-22-0118

自願參與用水效益標籤計劃 - 水龍頭
Voluntary Water Efficiency Labelling Scheme - Water Taps

Certificate of Registration 註冊證書

ACME SANITARY WARE CO., LTD. 2388

茲證明

This is to certify that

將下列水龍頭在本計劃內註冊：
has registered the following water tap under this scheme :

牌 子 / Brand	:	Grohe
型 號 / Model	:	33558XX3 + 402717040
種 類 / Type	:	Mixing
原產地 / Country or Region Origin	:	Thailand (Mixer) Germany (Flow Controller)

XX – denotes the code of colour

在用水效益標籤上展示的標誌 *Symbolic Presentation on the Water Efficiency Label*	:	💧	滴水點 *Water droplet(s)*
用水效益級別 *Water Efficiency Grade*	:	1	
耗水量 *Water Consumption*	:	4.9	公升/分鐘 *litres/minute*

簽發日期：
Date of Issue : 10 June 2022

水務署
Water Supplies Department

林麗恒

水務署署長(林麗恒代行)
for Director of Water Supplies

水 務 署
Water Supplies Department

...dquarters
...打道七號入境事務大樓 48 樓
... Im... n Tower, 7 Gloucester Road, Wan Chai, Hong Kong

ACME SANITARY WARE CO., LTD. 2388 7171

本署檔號 / Our ref. : ... 3321/2021 T/J(1302/2021)
來函檔號 / Your ref. :
電話 / Tel. :
傳真 / Fax. : 2824 0578

12 October 2021

Approval of "GROHE" Basin Mixer
(General Acceptance No. C20211112)

Your letter ref. WRC/2616 dated 23 August 2021 refers.

Having considered the test report ref. J26793A issued on 24 July 2021 by Nutek Systems (HK) Ltd., this Authority accepts that the fitting described below complies with, and its use when correctly installed does not contravene, the Waterworks Ordinance and Regulations.

Name of Manufacturer:	Grohe AG
Country of Origin:	Thailand
Brand:	Grohe
Details of Fitting:	3/8" Single lever basin mixer
Model:	33558XX3 (where "XX" denote the code of colour)
Body Markings:	GROHE
Expiry Date:	4 July 2026

caringorganisation

This Authority hereby permits the use of the above fitting in fresh water plumbing systems subject to full adherence to Waterworks installation requirements. In particular, you are required to draw your customers' attention to the following requirement-

> "The cold water supply to the fitting shall be drawn from the same source that supplies the hot water apparatus so as to provide a balanced pressure and to obviate the risk of scalding in the event of a restriction or failure in the water supply."

A condition of this acceptance is that the fitting to be installed shall be replicas of the sample as certified by the testing agent mentioned above and without modifications. This acceptance may be withdrawn at any time if the standard of the fitting installed fails to meet that of the approved sample or if the fitting is found to be unsuitable for use in fresh water plumbing systems.

This acceptance is only applicable to the main body of the fitting, unless otherwise specified.

For the use of the fitting in any project, the General Acceptance Number of this letter must be quoted as a means of identification of acceptance of the fitting by this Authority.

Should you have any enquiries, please contact our Engineer Ms Winnie LO at tel. no. 3583 4086.

Yours faithfully,

(Roger WONG)
for Director of Water Supplies

Encl.

c.c. WSD 3321/1/82] - without catalogue
ME/MC] - with soft copy only